REV	ECO NO.	DESCRIPTION

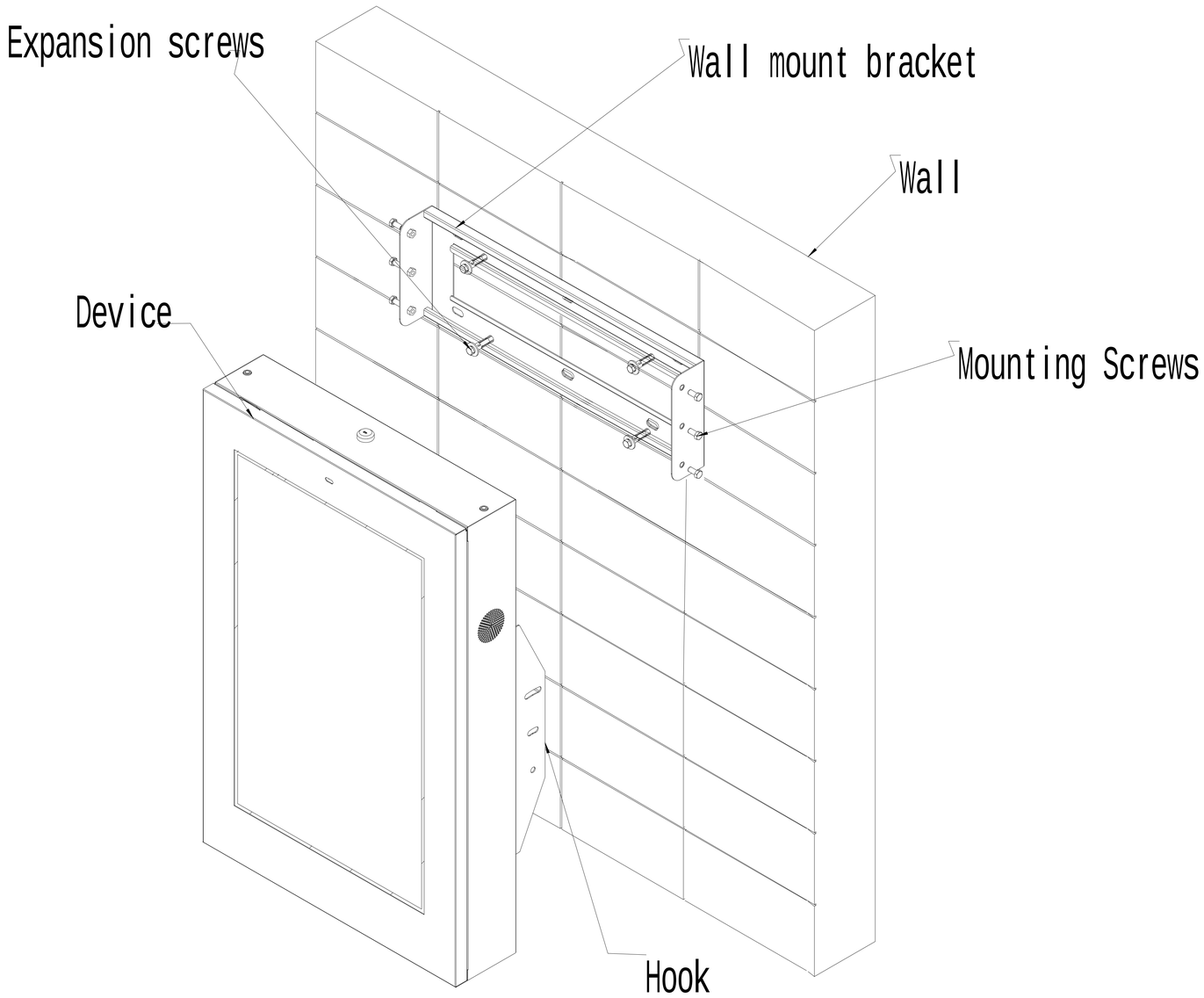

Installation Instructions:

1.Fix the wall bracket to the wall with expansion screws

2. Align the mounting holes at both ends of the hooked device with the holes on the wall mount bracket and securely connect them with screws.

RELEASE LEVEL: [ ] [ ] [ ] [x] [ ]
FILE NAME:

A3