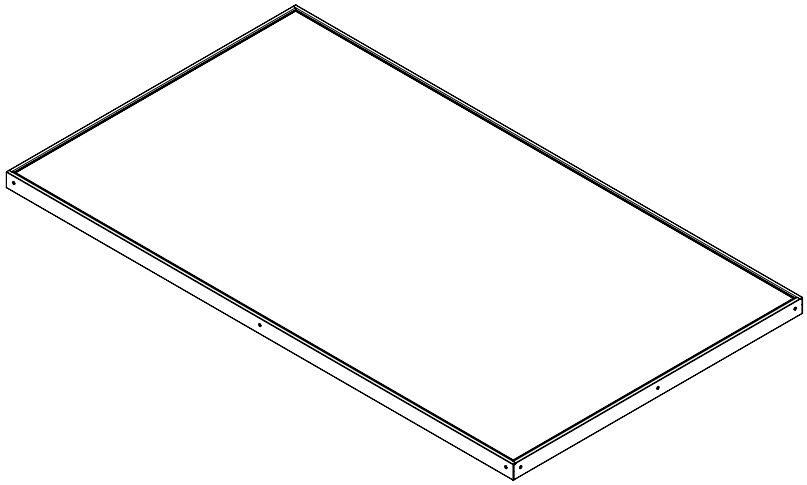

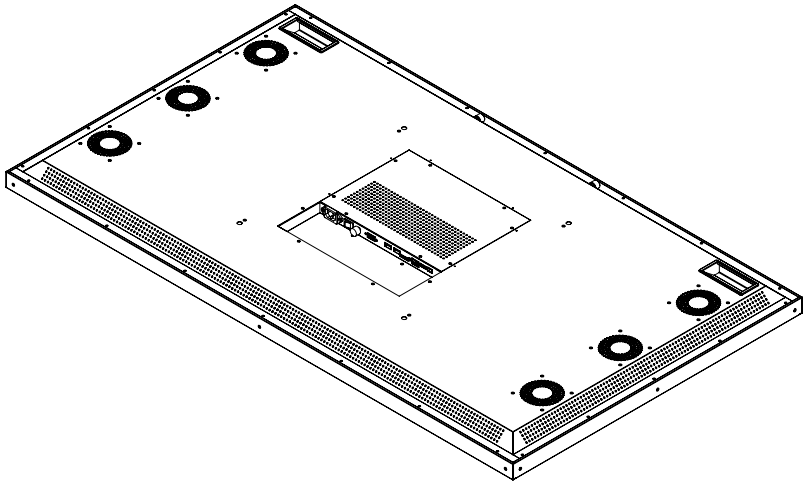

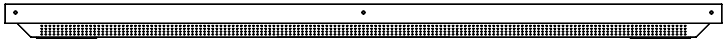

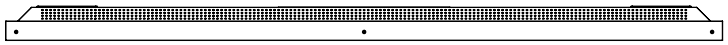

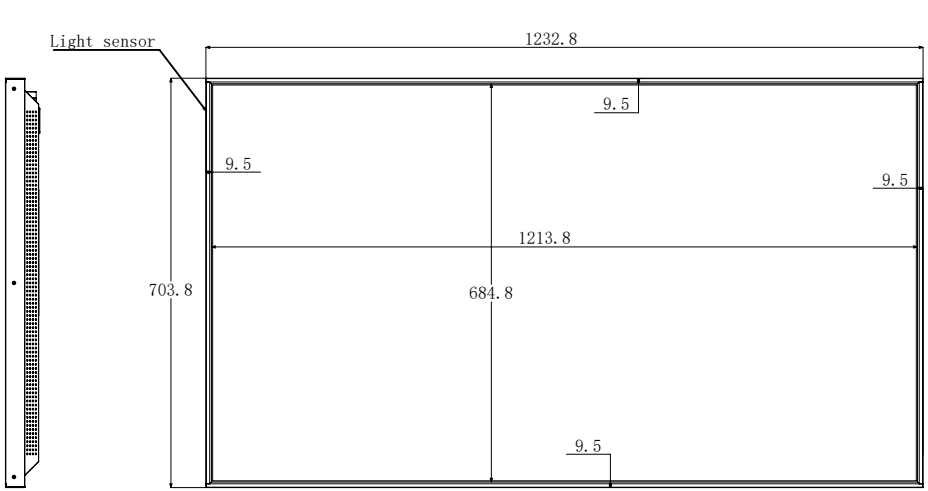
Light sensor
1232.8
9.5
9.5
9.5
1213.8
703.8
684.8
9.5

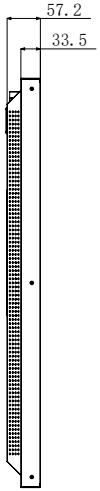
57.2
33.5

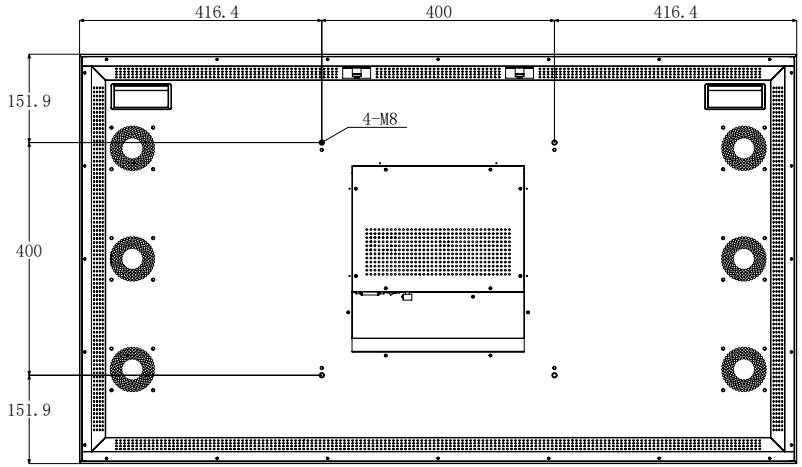
416.4
400
416.4
151.9
4-M8
400
151.9

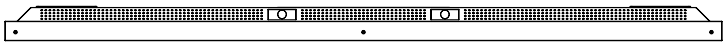

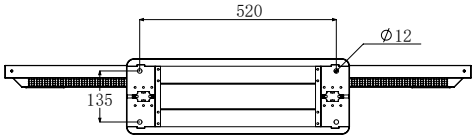
520
Ø12
135

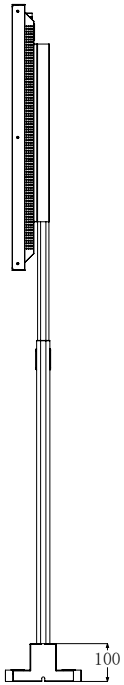
100

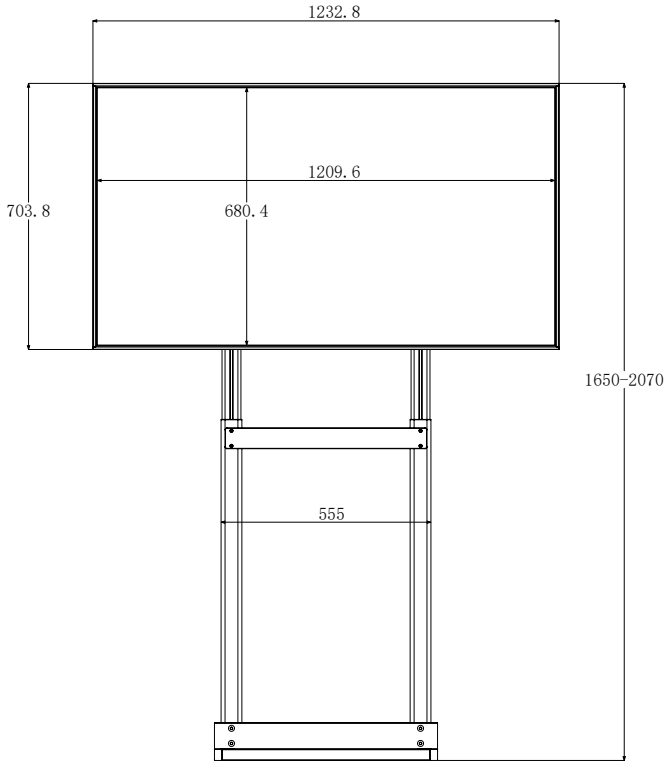
1232.8
1209.6
703.8
680.4
1650-2070
555

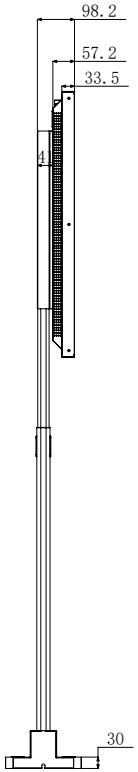
98.2
57.2
33.5
4
30

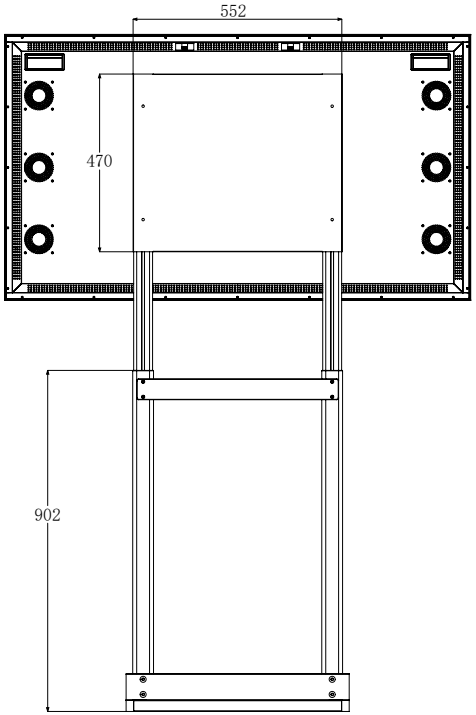
552
470
902

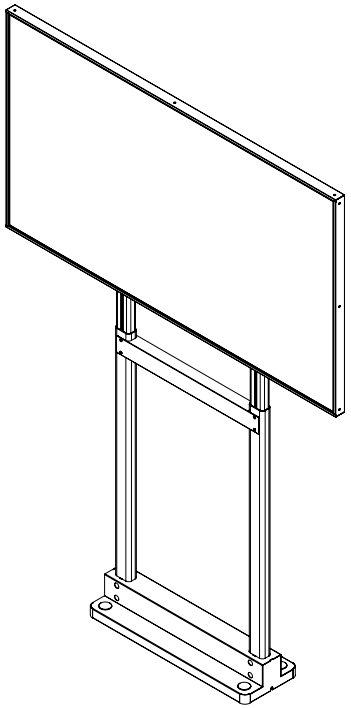

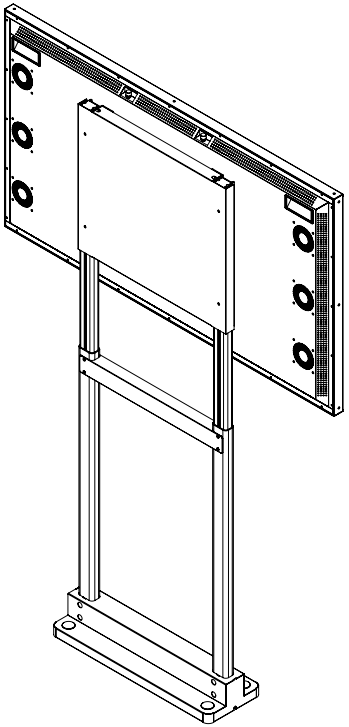

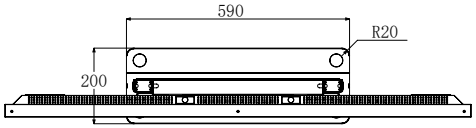
590
R20
200

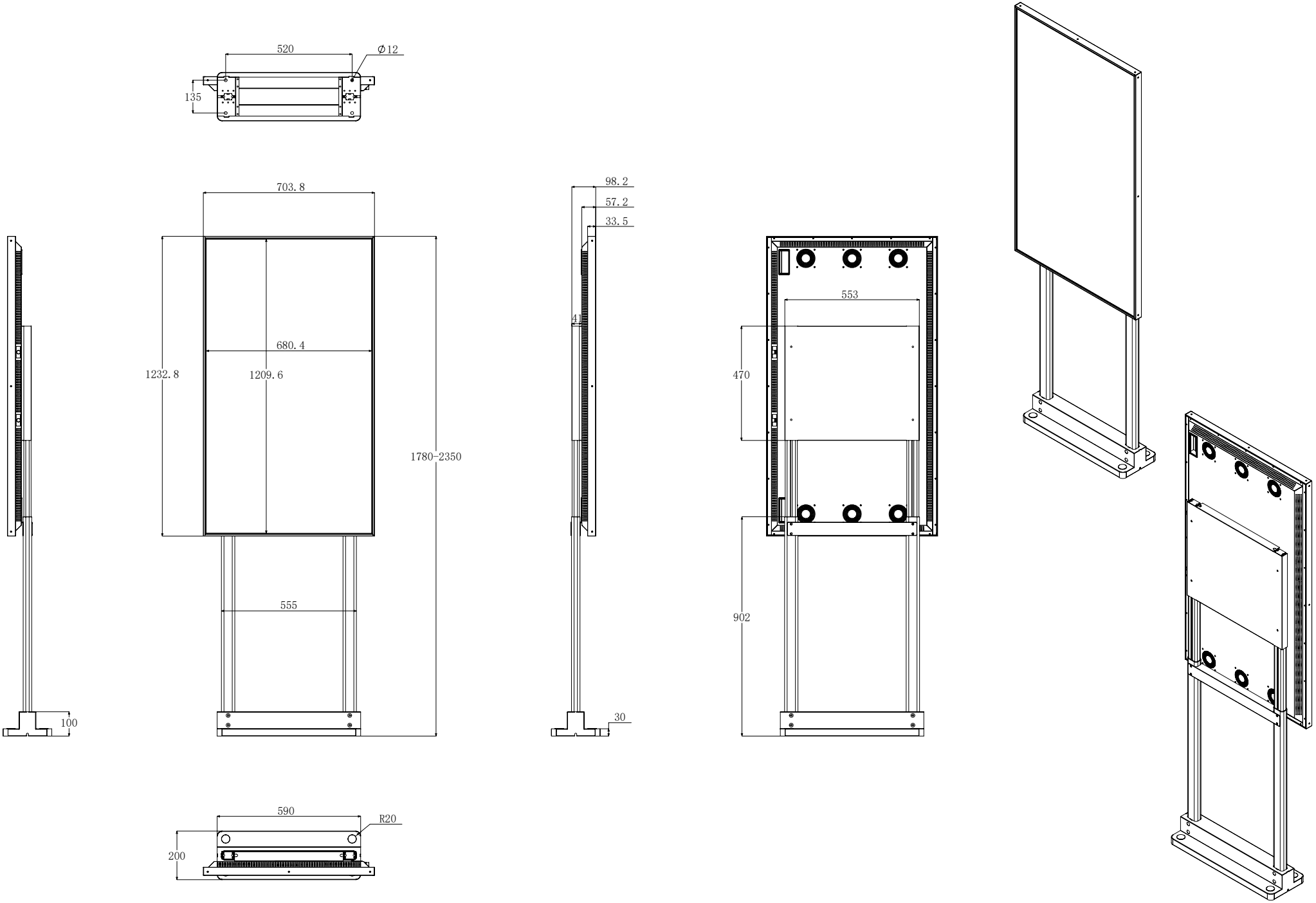
520
Φ12
135
703.8
680.4
1232.8
1209.6
1780-2350
555
100
98.2
57.2
33.5
41
30
553
470
902
590
R20
200

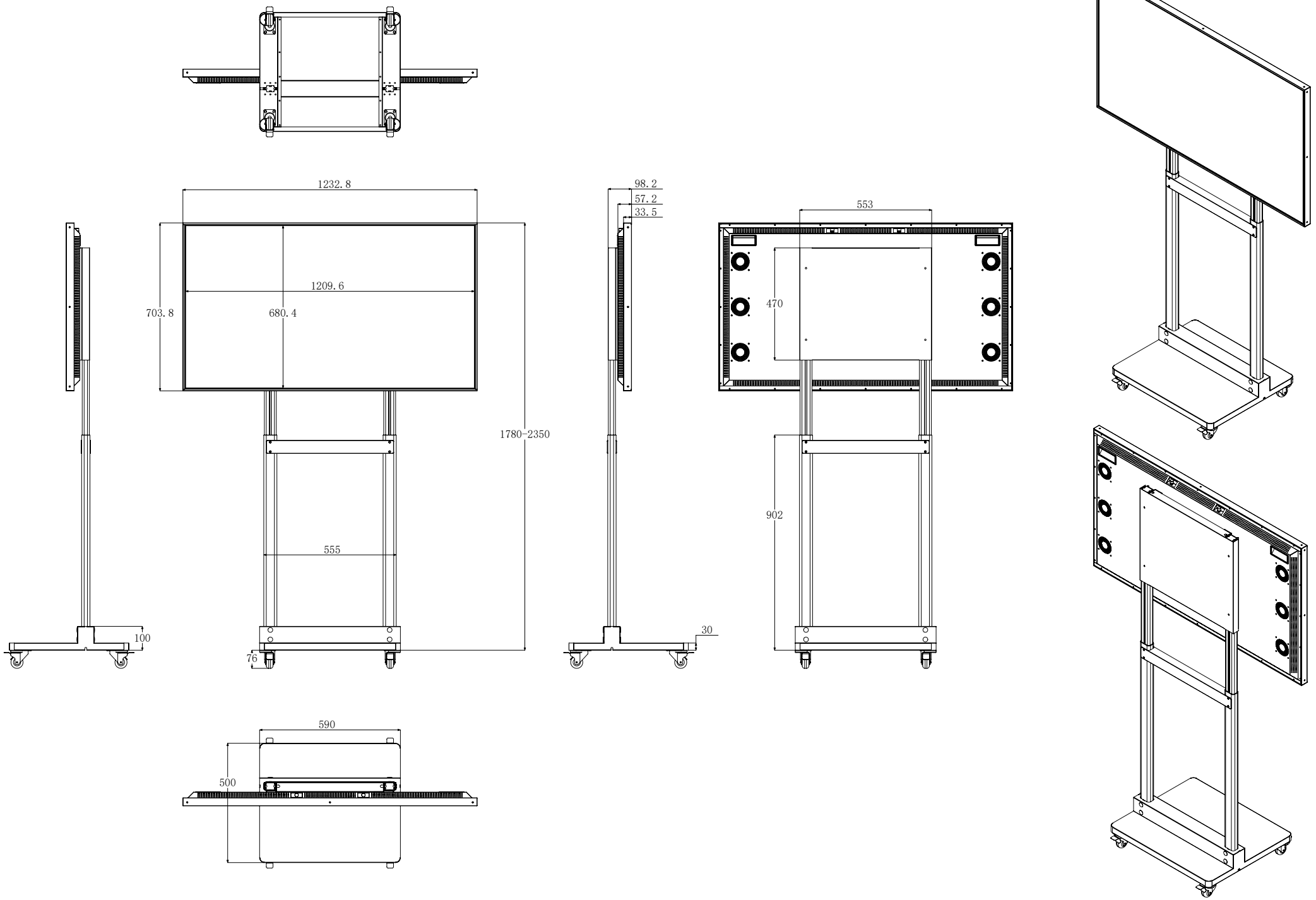
1232.8
1209.6
703.8
680.4
1780-2350
555
100
76
98.2
57.2
33.5
30
553
470
902
590
500

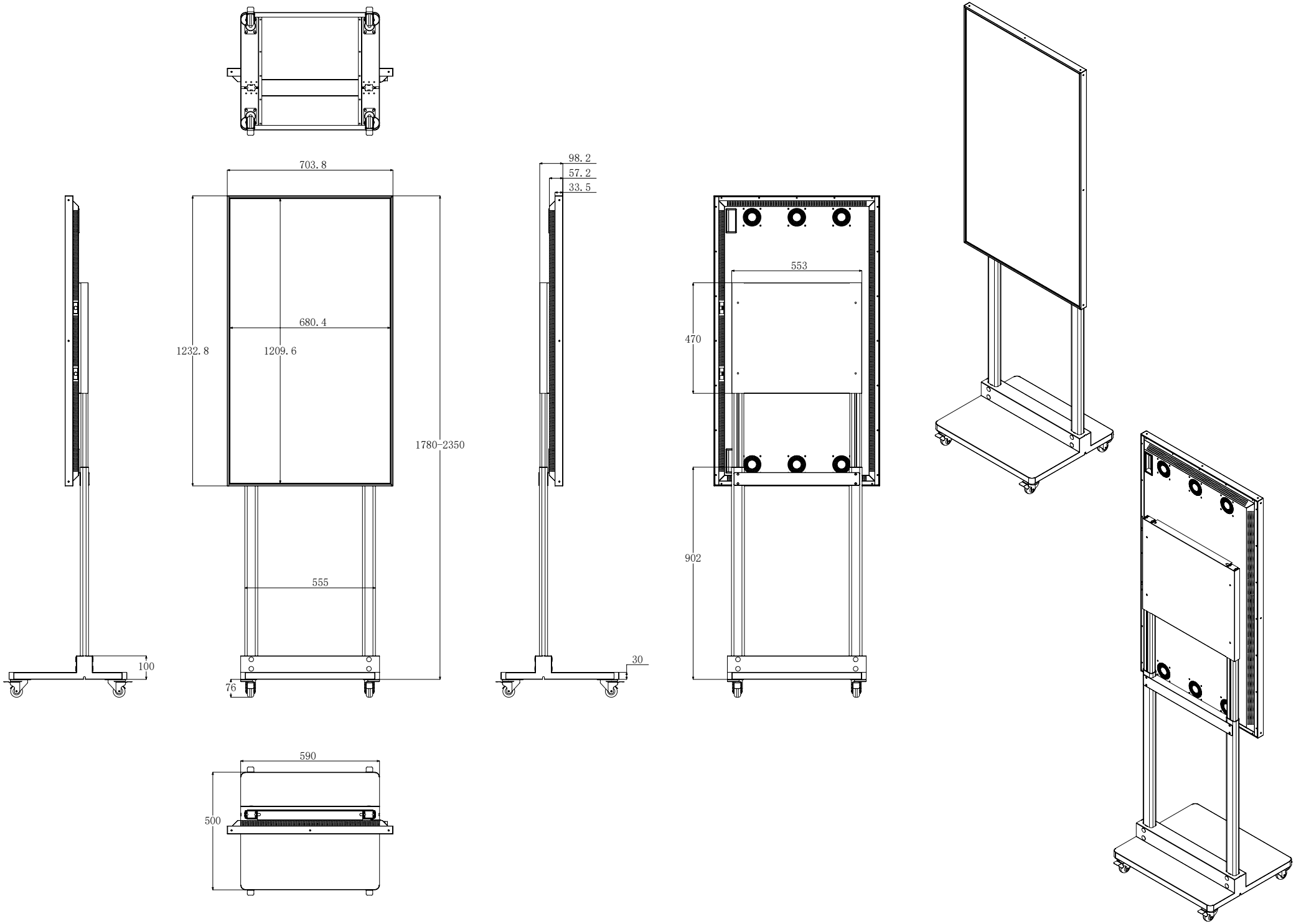
703.8
680.4
1232.8
1209.6
1780-2350
555
100
76
98.2
57.2
33.5
30
553
470
902
590
500

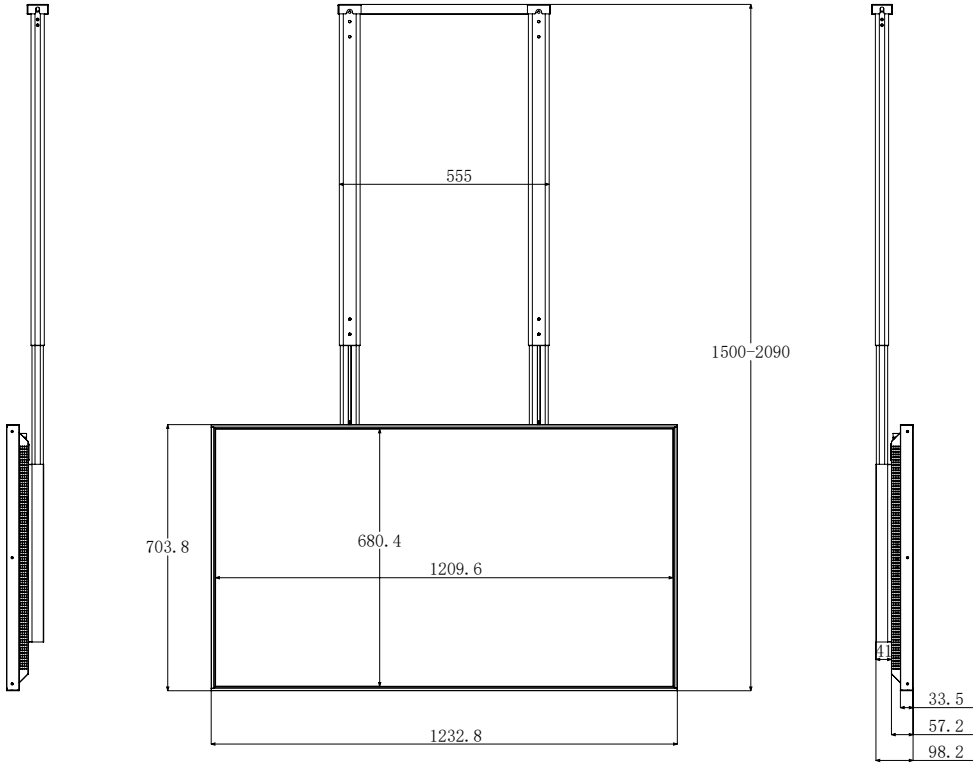
555
1500-2090
703.8
680.4
1209.6
1232.8
41
33.5
57.2
98.2

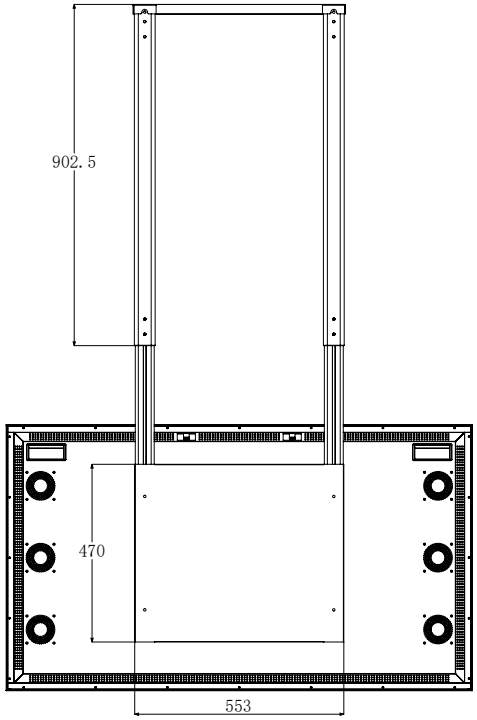
902.5
470
553

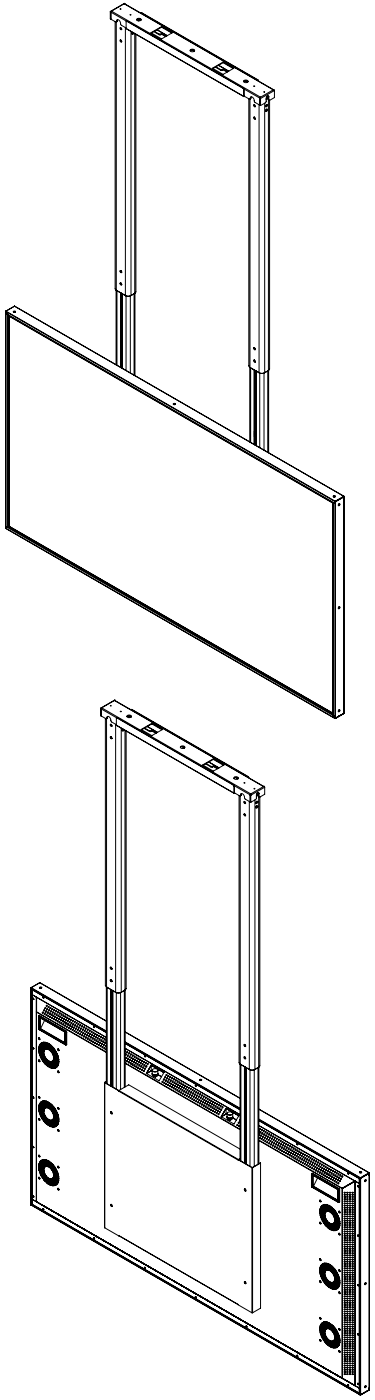

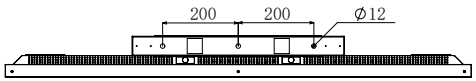
200
200
Φ12

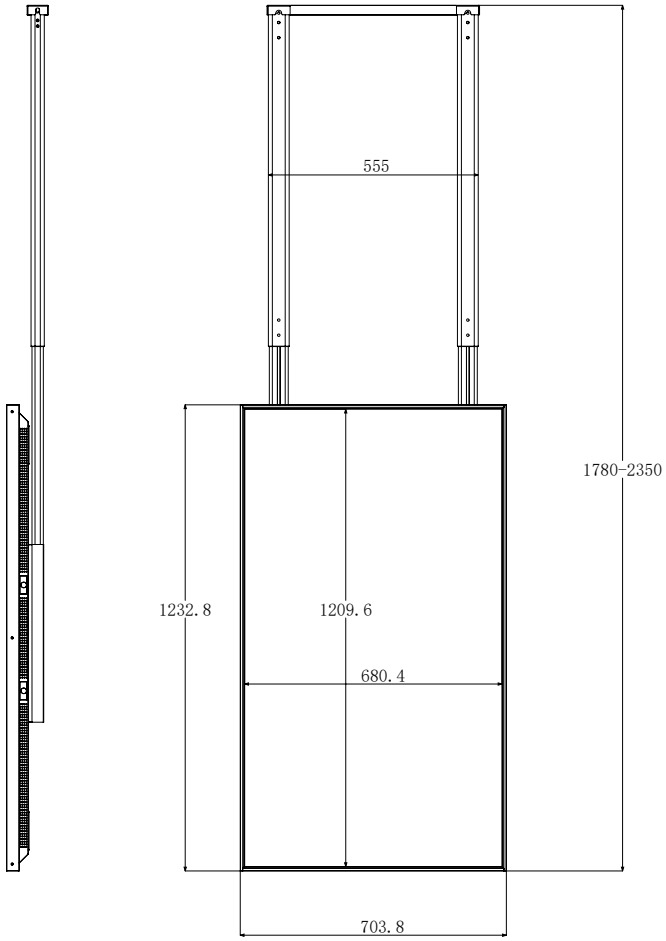
555
1780-2350
1232.8
1209.6
680.4
703.8

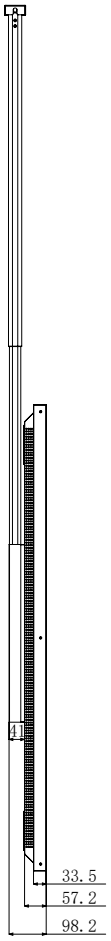
33.5
57.2
98.2

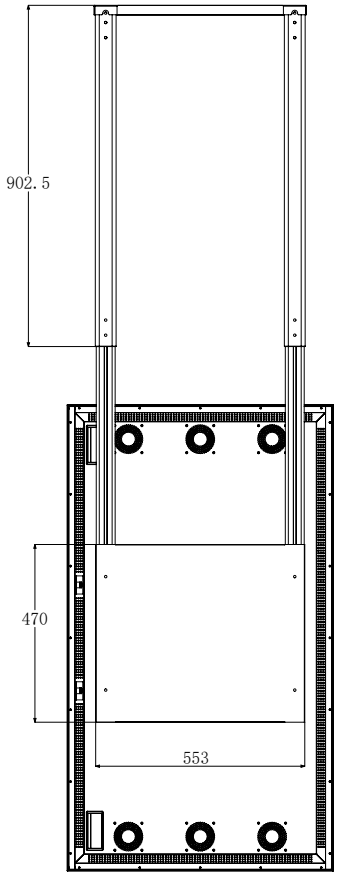
902.5
470
553

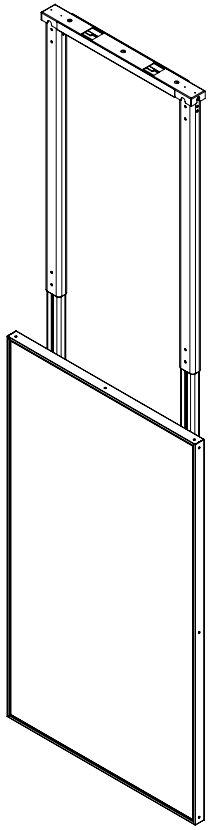

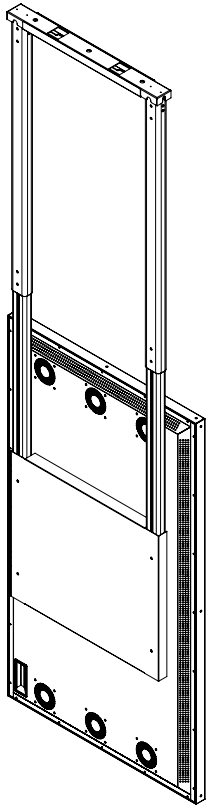

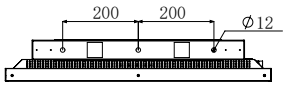
200
200
Φ12