# 75” Outdoor Wall Mounted Display

YJCen’s Wall Mounted Outdoor Displays are specifically designed to meet the demands of retail and commercial settings, prioritizing quality and reliability.

These displays boast an impressive IP65 Rating, allowing them to withstand a variety of weather conditions.

## Highlights

### Temperature Control System

Not only are these displays able to withstand hot and cold surroundings but they are able to manage the internal conditions to maximise the life of your product. Built in fan can now be tailored to allow the display to work at an optimal level in any climate.

### Weatherproof

Suitable for the harshest of outdoor conditions – designed with a robust, Corrosion protected, outer casing to give protection from both the elements and the public. The outer casing has an IP65 rating which means it keeps out all airborne swarf, dust and other particles as well as being protected from any wet weather conditions, broadening the range of possible environments.

### Smart Brightness Sensor

The display automatically adjusts its brightness based on ambient light conditions.
This feature significantly reduces power consumption and extends the monitor's lifespan.

### 24/7 operation

Built using commercial grade LCD panel &LED Backlights, these displays can be in constant 24/7 use for over 50,000 hours.

### 3000 nits

With 3000 nits maximum brightness, the panels are well equipped to make your content vividly stand out in any location.

### Anti Reflective Glass

The glass frontage is also anti-reflective to help defuse direct sunlight shining on the display, improving overall clarity.

# Specifications

## General

| | |
|---|---|
| Model | YJC-750-OD-W |
| Screen Size | 75" |
| Screen Active Area | 1650 (H)×928 (W)mm |
| Resolution | 4K(3840x2160) |
| Aspect Ratio | 16:9 |
| Brightness(nits) | 3,000 nits |
| Contrast Ratio | 1200:1 |
| Viewing Angle(H/V) | 178°/178° |
| Backlight Life Cycle | 50,000 Hrs |
| Operation Hours | 24/7 |
| Response Time | 6ms |
| Screen Orientation | Landscape |
| Touch | Optional |

## System

| | |
|---|---|
| OS | Android 11 |
| CPU | RK3568, Quad-core 2.0GHz |
| GPU | The Mali-G52 GPU supports OpenGL ES 1.1/2.0/3.2, OpenCL 2.0, and Vulkan 1.1. |
| DDR | DDR 2GB |
| ROM | 32GB EMMC |
| Language | English/Multilingual |

## Connectivity

| | |
|---|---|
| Input | USB x2, HDMI IN x1, Ethernet RJ45 x1 |

## Network connection

| | |
|---|---|
| Wifi or LAN | Yes |
| 3G/4G connection | Optional |

## Speaker

| | |
|---|---|
| Build in speaker | Yes |
| BT Speaker Support | Yes |

## Thermal management

| | |
|---|---|
| Smart Backlight Control | Yes |
| Smart Temperature Control | Yes |
| Smart Fans Control | Yes |
| Overheating protection | Yes |

## Physical

| | |
|---|---|
| IP rating | IP65 |
| Glass | Yes |
| Shell | Cold-rolled steel |
| Standard Color | Black |
| Dimensions (W x H x D) | 1160 x 2000 x 200mm |
| Net Weight | 197 kg |
| Packing Dimensions(W×H×D) | 2040(W)×1430(H)×400(D) mm |

## Operations

| | |
|---|---|
| Working environment | Outdoor |
| Auto Brightness control | Light sensor |
| Operation Temperature | -45℃ to 65℃ |
| Operation Humidity | 10% to 80% |
| Storage Temperature | -50℃ to70℃ |
| Storage Humidity | 10% to 80% |

## What's in the box

| | |
|---|---|
| Accessories | Power cable x 1 |
| | Key x 1 |
| | Remote control x 1 |
| | Expansion screws x 4 |
| | User Manual (Electronic Version) |

## Power

| | |
|---|---|
| Power Supply | AC 100~240V,50/60Hz |
| Power Type | Built-In Power |
| Power Consumption | 530W(Max.) |
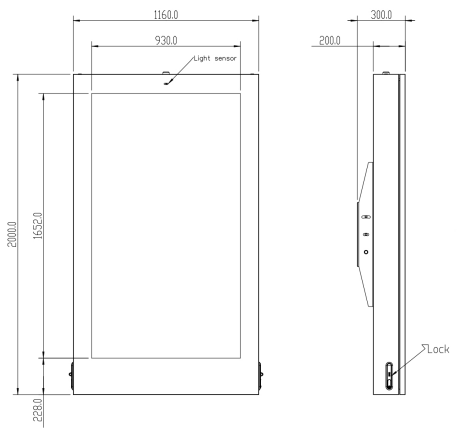
## Dimensions