32” Outdoor Wall Mounted Display

YJCen’s Wall Mounted Outdoor Displays are specifically designed to meet the demands of retail and commercial settings, prioritizing quality and reliability.

These displays boast an impressive IP65 Rating, allowing them to withstand a variety of weather conditions.

Highlights

Temperature Control System

Not only are these displays able to withstand hot and cold surroundings but they are able to manage the internal conditions to maximise the life of your product. Built in fan can now be tailored to allow the display to work at an optimal level in any climate.

Weatherproof

Suitable for the harshest of outdoor conditions – designed with a robust, Corrosion protected, outer casing to give protection from both the elements and the public. The outer casing has an IP65 rating which means it keeps out all airborne swarf, dust and other particles as well as being protected from any wet weather conditions, broadening the range of possible environments.

Smart Brightness Sensor

The display automatically adjusts its brightness based on ambient light conditions.
This feature significantly reduces power consumption and extends the monitor's lifespan.

24/7 operation

Built using commercial grade LCD panel &LED Backlights, these displays can be in constant 24/7 use for over 50,000 hours.

3000 nits

With 3000 nits maximum brightness, the panels are well equipped to make your content vividly stand out in any location.

Anti Reflective Glass

The glass frontage is also anti-reflective to help defuse direct sunlight shining on the display, improving overall clarity.

Specifications

General

Model	YJC-320-OD-W
Screen Size	32"
Screen Active Area	697 (H)×392 (W)mm
Resolution	FHD(1920×1080)
Aspect Ratio	16:9
Brightness(nits)	3,000 nits
Contrast Ratio	1200:1
Viewing Angle(H/V)	178°/178°
Backlight Life Cycle	50,000 Hrs
Operation Hours	24/7
Response Time	6ms
Screen Orientation	Landscape
Touch	Optional

System

OS	Android 11
CPU	RK3568, Quad-core 2.0GHz
GPU	The Mali-G52 GPU supports OpenGL ES 1.1/2.0/3.2, OpenCL 2.0, and Vulkan 1.1.
DDR	DDR 2GB
ROM	32GB EMMC
Language	English/Multilingual

Connectivity

Input	USB x2, HDMI IN x1, Ethernet RJ45 x1

Network connection

Wifi or LAN	Yes
3G/4G connection	Optional

Speaker

Build in speaker	Yes
BT Speaker Support	Yes

Thermal management

Smart Backlight Control	Yes
Smart Temperature Control	Yes
Smart Fans Control	Yes
Overheating protection	Yes

Physical

IP rating	IP65
Glass	Yes
Shell	Cold-rolled steel
Standard Color	Black
Dimensions (W x H x D)	570 x 930 x 148mm
Net Weight	46 kg
Packing Dimensions(W×H×D)	1010(W)×800(H)×350(D) mm

Operations

Working environment	Outdoor
Auto Brightness control	Light sensor
Operation Temperature	-45℃ to 65℃
Operation Humidity	10% to 80%
Storage Temperature	-50℃ to70℃
Storage Humidity	10% to 80%

What's in the box

Accessories	Power cable x 1
	Key x 1
	Remote control x 1
	Expansion screws x 4
	User Manual (Electronic Version)

Power

Power Supply	AC 100~240V,50/60Hz
Power Type	Built-In Power
Power Consumption	200W(Max.)
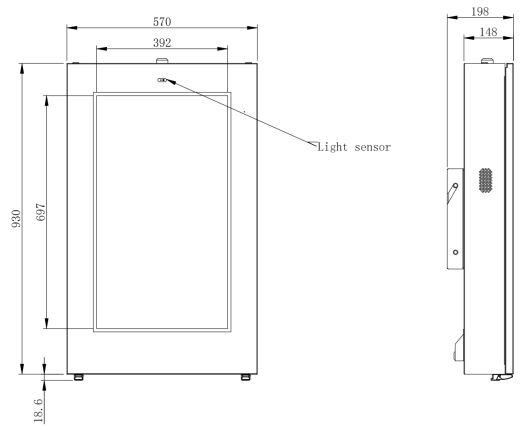
Dimensions