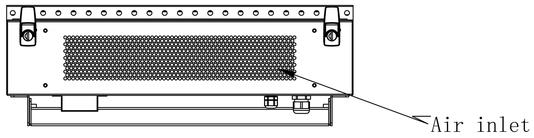
Air inlet

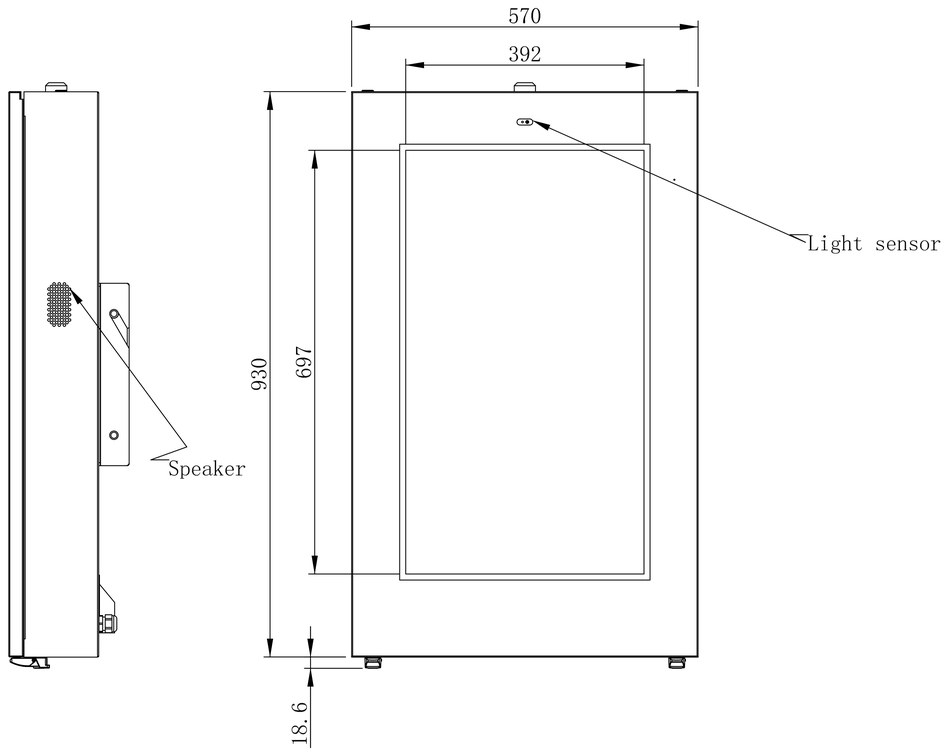
570
392
930
697
18.6
Light sensor
Speaker

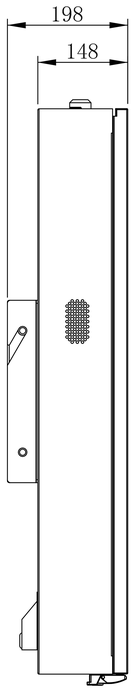
198
148

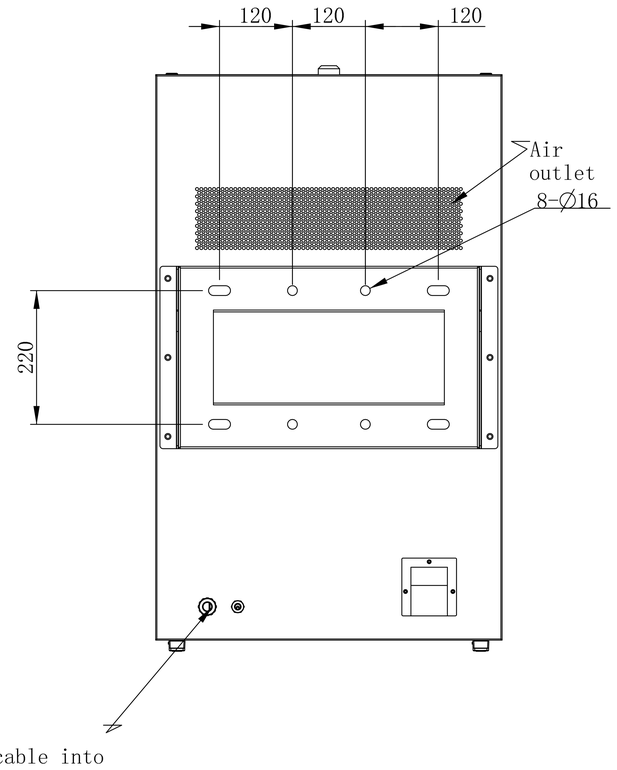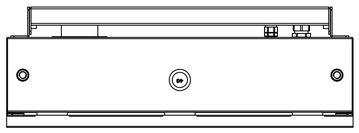
120
120
120
Air
outlet
8-∅16
220
Power cable into