REV	ECO NO.	DESCRIPTION

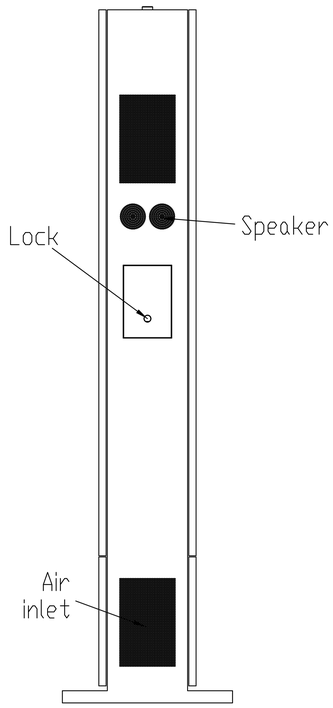

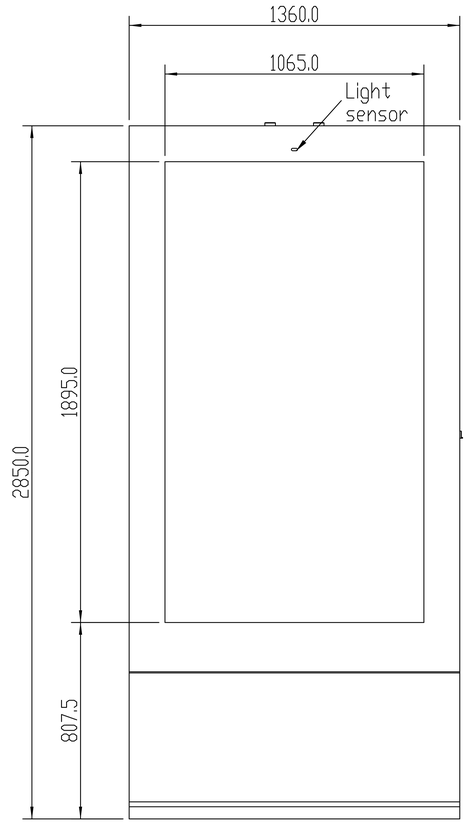

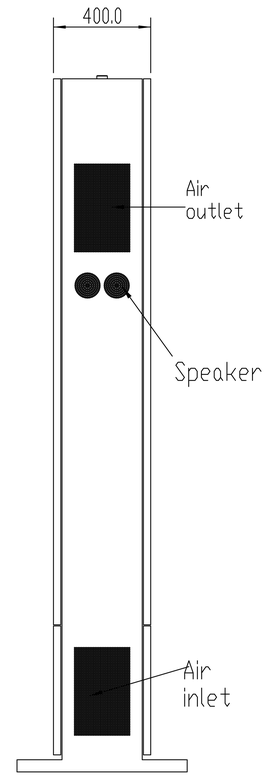

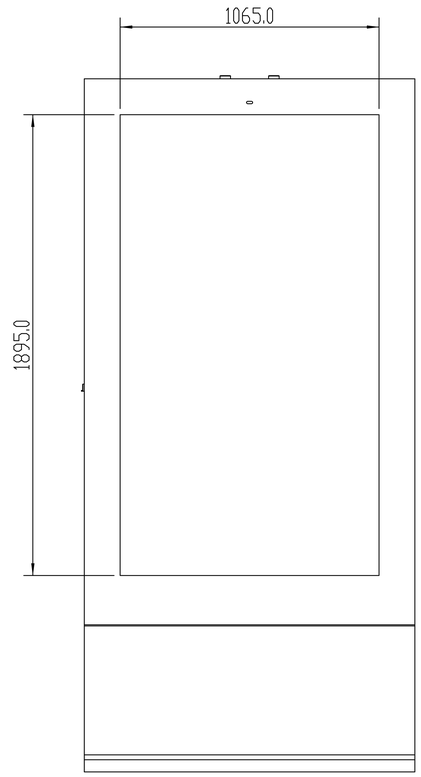

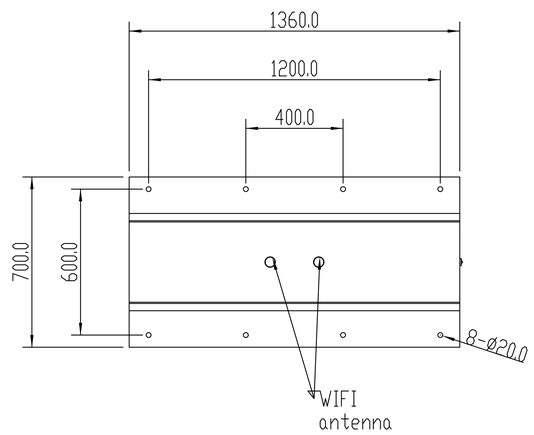

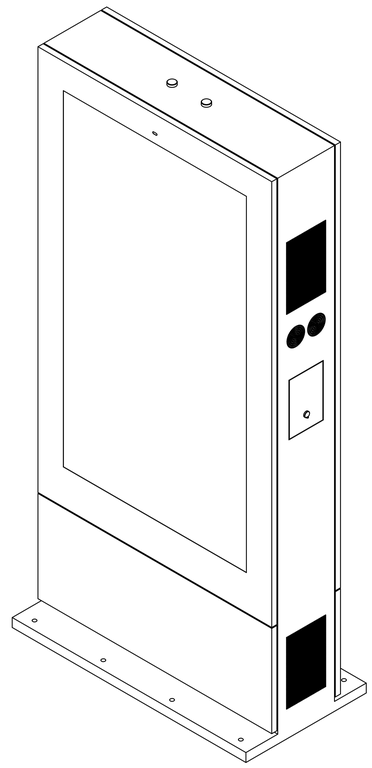

RELEASE LEVEL: [ ]
FILE NAME:

A3