69” Stretched Display

YJCen's Stretched Display is designed to provide a wider and more immersive viewing experience, ideal for advertising in narrow spaces. Their slim, elongated form factor makes them perfect for applications such as retail signage, transportation displays, and control rooms.

With vibrant image quality and energy efficiency, they offer a sleek solution for businesses looking to captivate audiences in modern, space-constrained environments.

Highlights

Landscape & portrait

Both landscape and portrait orientations are possible, providing you with endless creative and functional possibilities to fulfil your commercial or informative goals

178° Wide viewing angle

The extra wide 178° viewing angle is a perfect fit for shoppers, employees or visitors that will view outdoor IP66 display.

Optional Cloud Update

For a small charge you can also upgrade your screen to be networked, allowing you to remotely update your screen via LAN or WiFi. To find out more about our Digital Signage CMS

IPS Panels

Commercial grade IPS technology accurately displays image quality and colour depth with no fall-off in colour accuracy.

Plug & Play

uploading images to the screen via a USB stick. Insert into the display, wait for your content to copy over and then remove. Your images and videos will now play in a continuous loop.

LED Backlight

Thanks to their LED backlight these displays offer improved brightness and contrast as well as drastically improving their lifespan &reducing their power consumption.

Specifications

General

Model	YJC-690-SD
Screen Size	69"
Screen Active Area(mm)	1635.84 x 633.89
Resolution	3840 x 1488
Aspect Ratio	16:9
Brightness(nits)	400 nits
Contrast Ratio	1200:1
Viewing Angle(H/V)	178°/178°
Backlight Life Cycle	50,000 Hrs
Operation Hours	24/7
Response Time	6ms
Screen Orientation	Portrait or Landscape

System

OS	Android 11
CPU	RK3568, Quad-core 2.0GHz
GPU	The Mali-G52 GPU supports OpenGL ES 1.1/2.0/3.2, OpenCL 2.0, and Vulkan 1.1.
DDR	DDR 2GB
ROM	32GB EMMC
Language	English/Multilingual

Connectivity

Input	USB x2, Ethernet RJ45 x1

Network connection

Wifi or LAN	Yes
3G/4G connection	Optional

Physical

IP rating	IP5X
Shell	Cold-rolled steel sheet
Standard Color	Black
Dimensions (H x W x D)	1675.84 x 673.89 x 28 mm
Net Weight	30 kg

Operations

Working environment	Indoor
Operation Temperature	0℃ to 45℃
Operation Humidity	10% to 80%
Storage Temperature	-10℃ to50℃
Storage Humidity	10% to 80%

Speaker

Build in speaker	Yes
BT Speaker Support	Yes

What's in the box

Accessories	Power cable x 1
	Remote control x 1
	Antenna x 1
	User Manual (Electronic Version)

Power

Power Supply	AC 100~240V,50/60Hz
Power Type	Built-In Power
Power Consumption	120W(Max.)
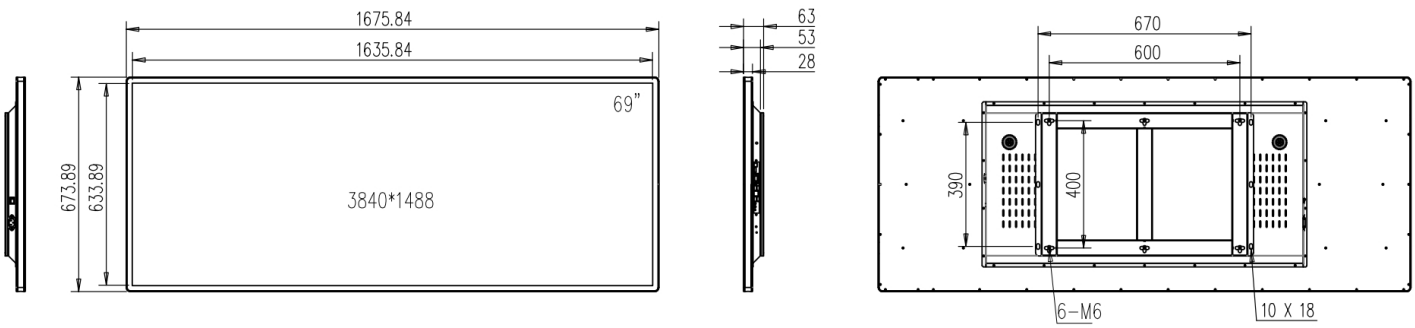
Dimensions