REV	ECO NO.	DESCRIPTION

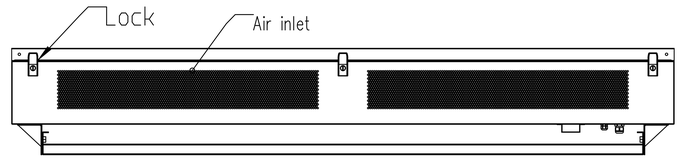

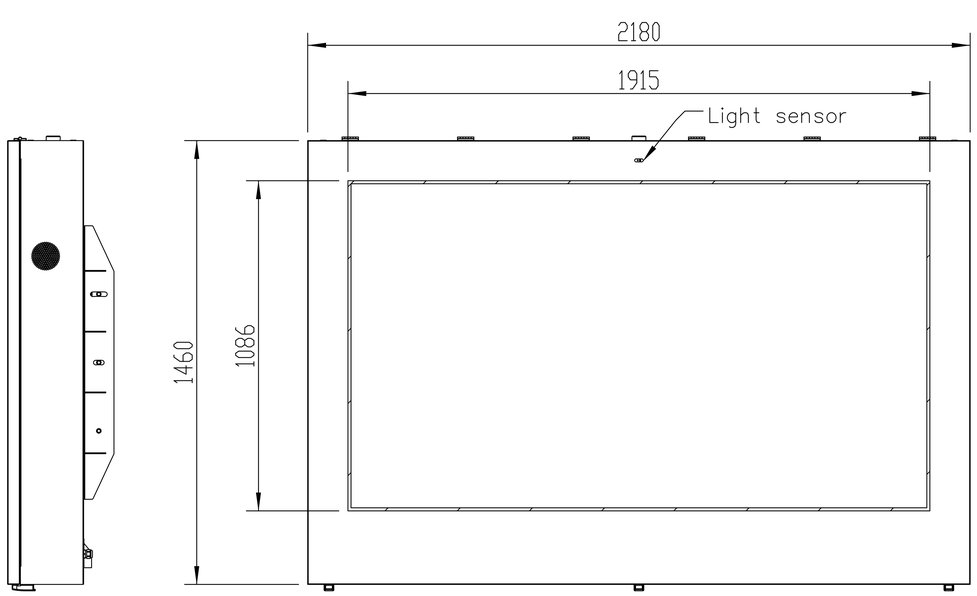

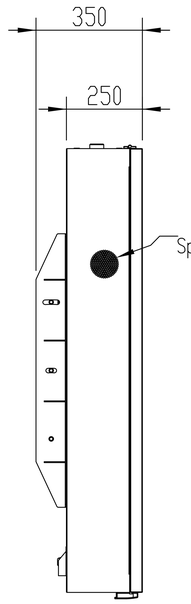

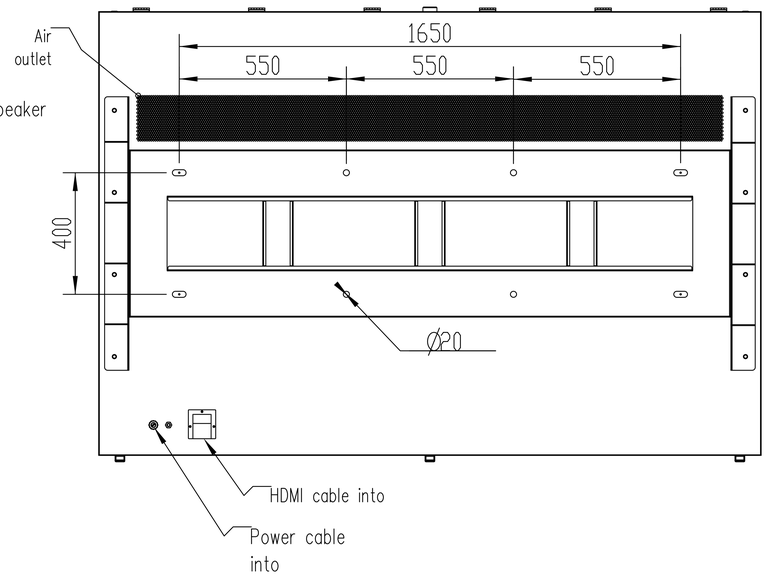

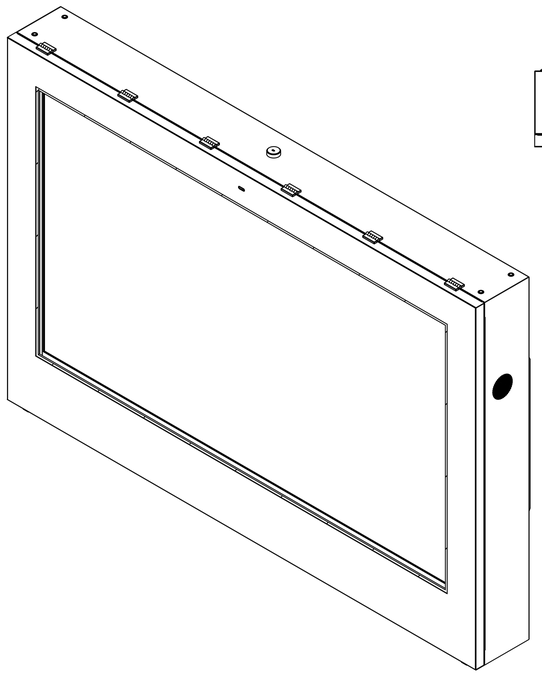

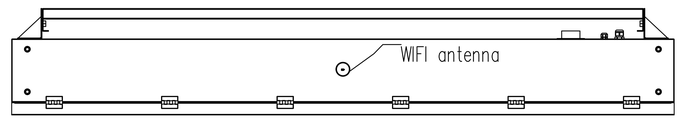

.X	±0.1					TITLE:			
.XX	±0.01								
.XXX	±0.001	ANG	±0.5	DRAW:	DATE:	UNIT'S:	MM	DWG NO.:	
				CHKD:	✳DATE: ✳	FINISH:			
				STAD:	✳DATE: ✳	MASS(Kg):	0.000	PART NO.: ✳	REV
				APPD:	✳DATE: ✳	SCALE:	0.032		A0
				PRODUCT:	✳	SHEET:	1 OF 1	MAT'L:	

RELEASE LEVEL: [ ]
FILE NAME:

A3