REV	ECO NO.	DESCRIPTION

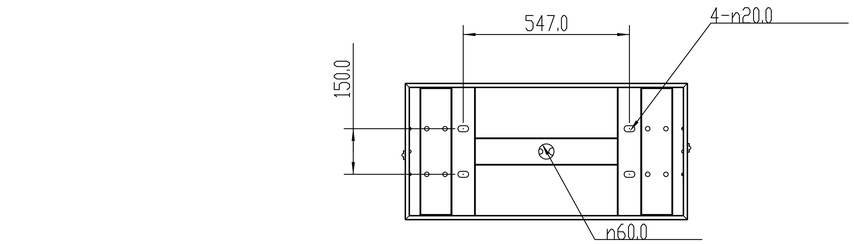

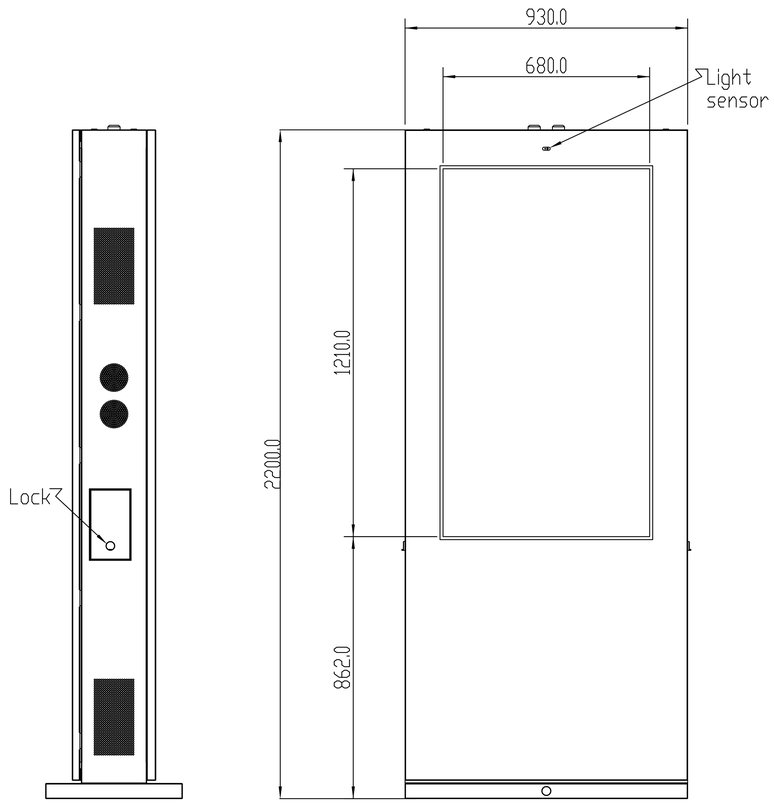

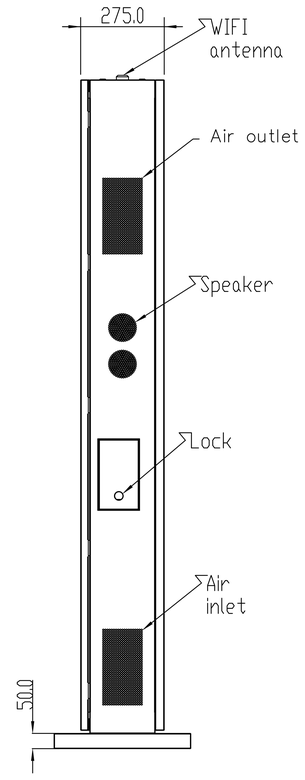

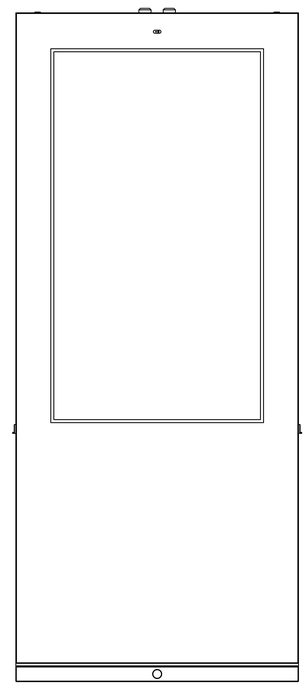

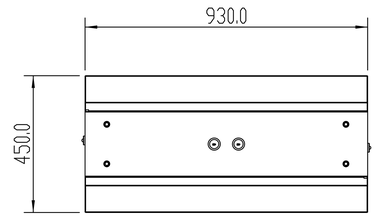

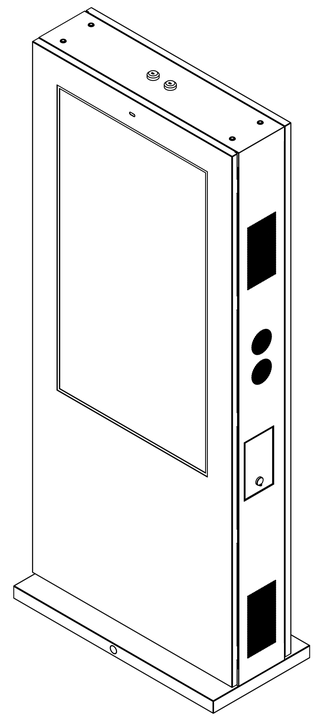

RELEASE LEVEL:
FILE NAME:

A3