15.6” Digial Signage

YJCen's Digital Sigane is a complete digital signage solution designed to deliver dynamic content with simplicity and reliability. It combines intuitive management software with robust hardware to ensure your messages are always displayed clearly and on schedule.

From advertising and information boards to wayfinding and menus, this system provides a versatile platform for modern communication.

Highlights

Landscape & portrait

Both landscape and portrait orientations are possible, providing you with endless creative and functional possibilities to fulfil your commercial or informative goals

178° Wide viewing angle

The extra wide 178° viewing angle is a perfect fit for shoppers, employees or visitors that will view outdoor IP66 display.

Optional Cloud Update

For a small charge you can also upgrade your screen to be networked, allowing you to remotely update your screen via LAN or WiFi. To find out more about our Digital Signage CMS

IPS Panels

Commercial grade IPS technology accurately displays image quality and colour depth with no fall-off in colour accuracy.

Plug & Play

uploading images to the screen via a USB stick. Insert into the display, wait for your content to copy over and then remove. Your images and videos will now play in a continuous loop.

LED Backlight

Thanks to their LED backlight these displays offer improved brightness and contrast as well as drastically improving their lifespan &reducing their power consumption.

Specifications

General

Model	YJC-156
Screen Size	15.6"
Screen Active Area(mm)	344.16 x 193.59
Resolution	FHD(1920×1080)
Aspect Ratio	16:9
Brightness(nits)	250 nits
Contrast Ratio	1200:1
Viewing Angle(H/V)	178°/178°
Backlight Life Cycle	50,000 Hrs
Operation Hours	24/7
Response Time	6ms
Screen Orientation	Portrait or Landscape

System

OS	Android 11
CPU	RK3568, Quad-core 2.0GHz
GPU	The Mali-G52 GPU supports OpenGL ES 1.1/2.0/3.2, OpenCL 2.0, and Vulkan 1.1.
DDR	DDR 2GB
ROM	32GB EMMC
Language	English/Multilingual

Connectivity

Input	USB x2, Ethernet RJ45 x1

Network connection

Wifi or LAN	Yes
3G/4G connection	Optional

Speaker

Build in speaker	Yes
BT Speaker Support	Yes

Power

Power Supply	AC 100~240V,50/60Hz
Power Type	Built-In Power
Power Consumption	5W(Max.)

Physical

IP rating	IP5X
Glass	Yes
Shell	Cold-rolled steel sheet
Standard Color	Black
Dimensions (H x W x D)	376.4 x 236.4 x 13mm
Net Weight	3 kg
Packing Dimensions(W×H×D)	450 x 310 x 110mm

Operations

Working environment	Indoor
Operation Temperature	0℃ to 45℃
Operation Humidity	10% to 80%
Storage Temperature	-10℃ to50℃
Storage Humidity	10% to 80%

What's in the box

Accessories	Power cable x 1
	Remote control x 1
	Antenna x 1
	User Manual (Electronic Version)
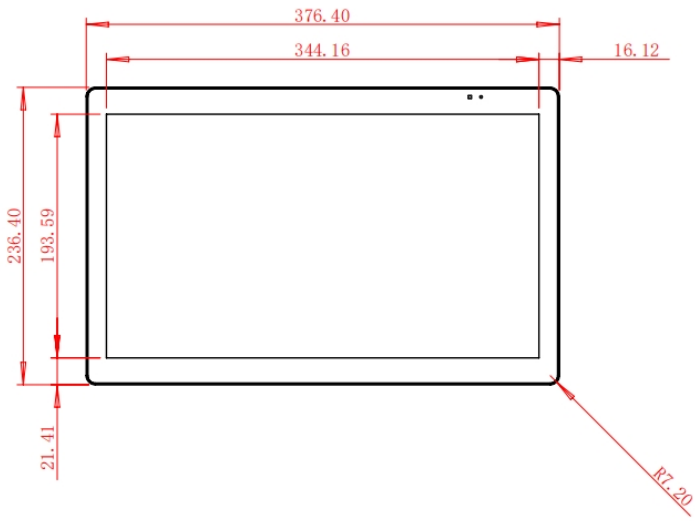
Dimensions