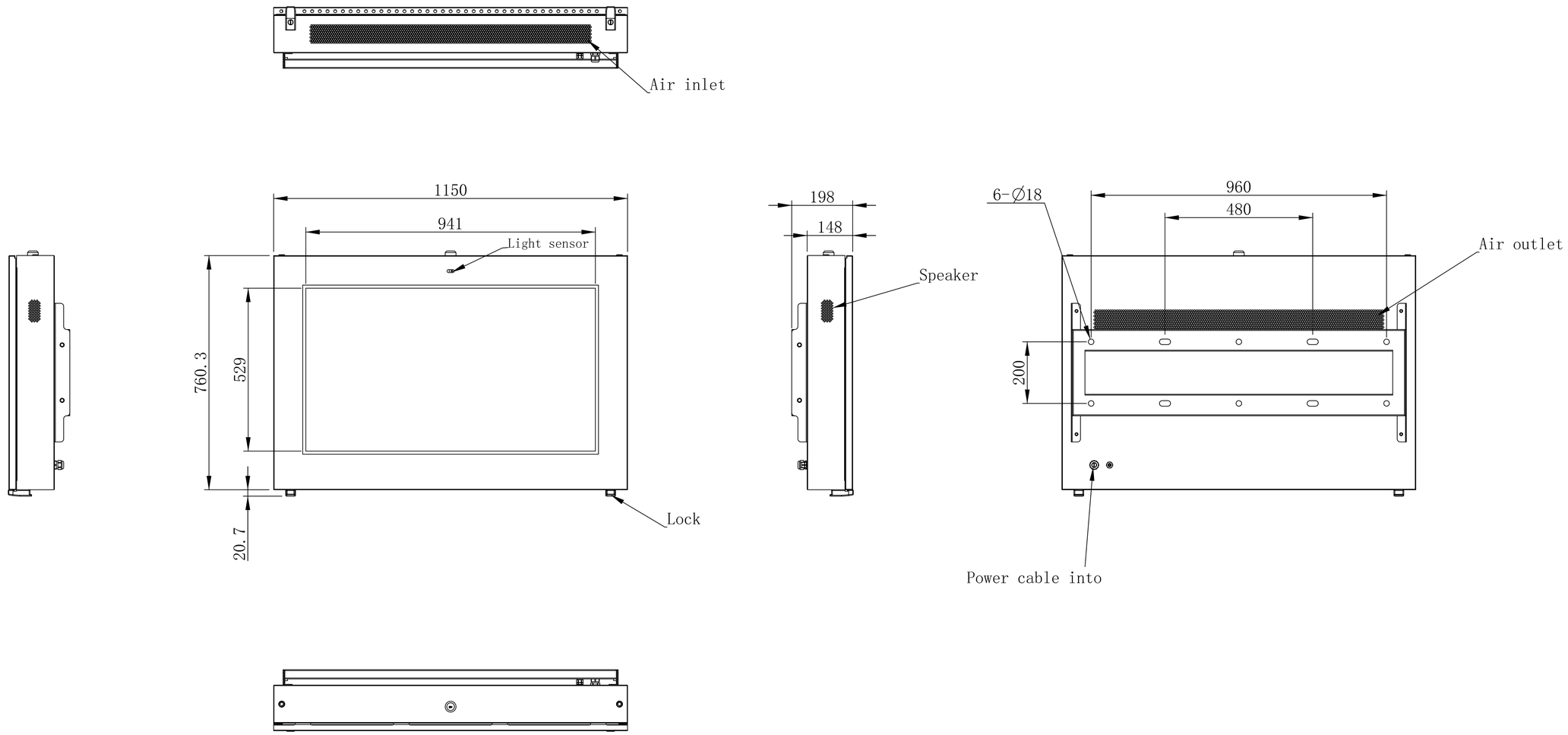
Air inlet
1150
941
Light sensor
760.3
529
20.7
Lock
198
148
Speaker
6-∅18
960
480
Air outlet
200
Power cable into

备注：