REV	ECO NO.	DESCRIPTION

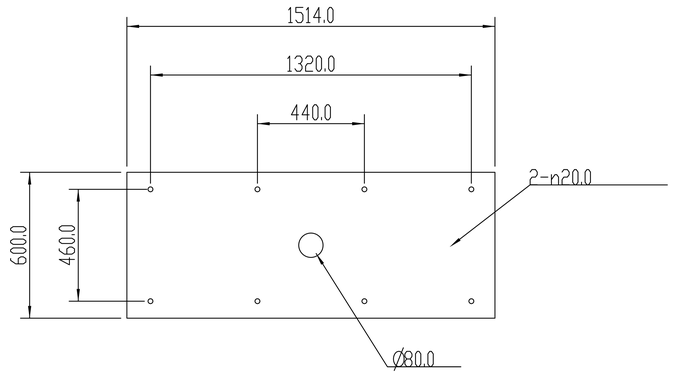

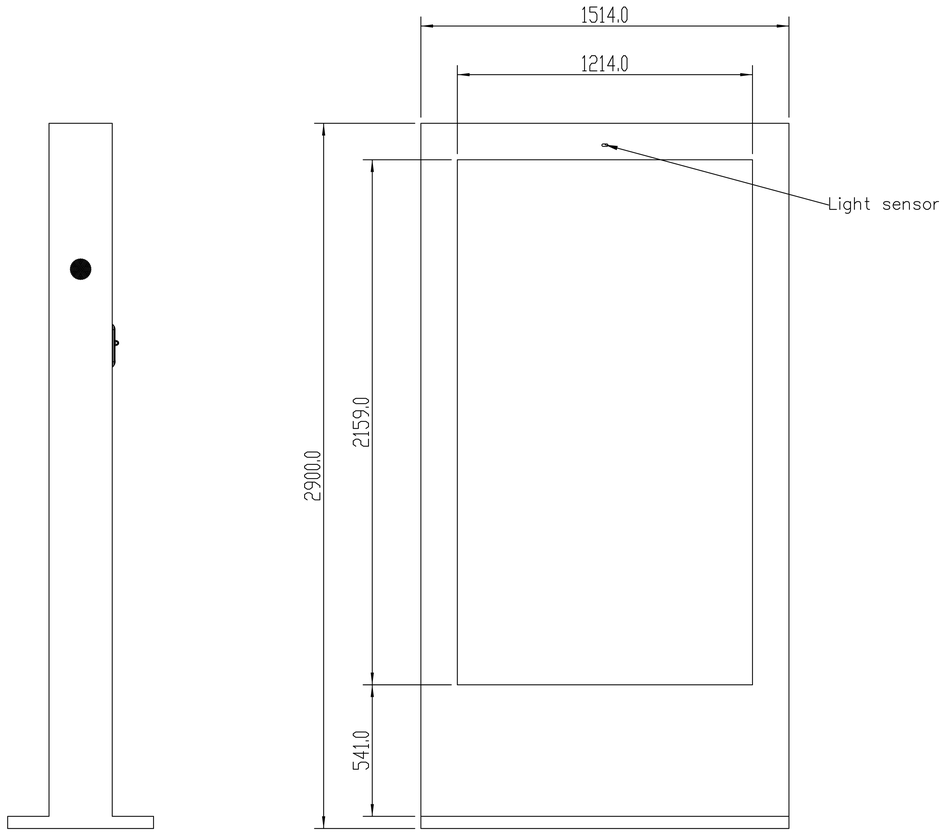

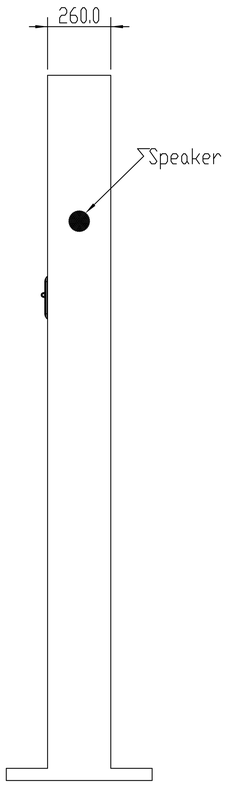

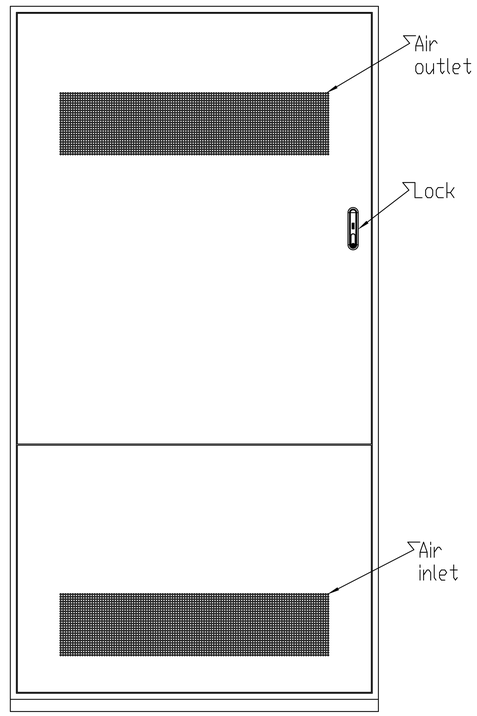

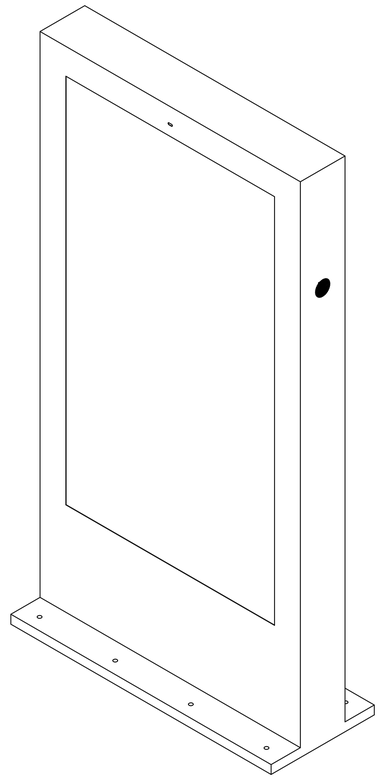

RELEASE LEVEL: [ ]
FILE NAME: 86-000

A3