REV	ECO NO.	DESCRIPTION

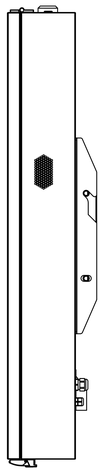

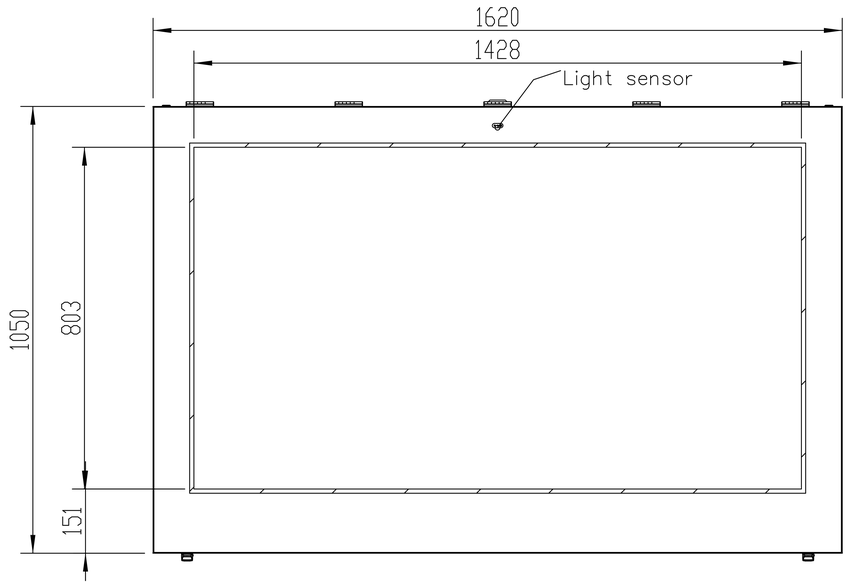

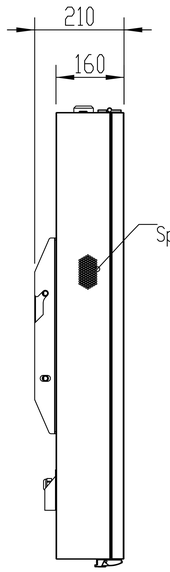

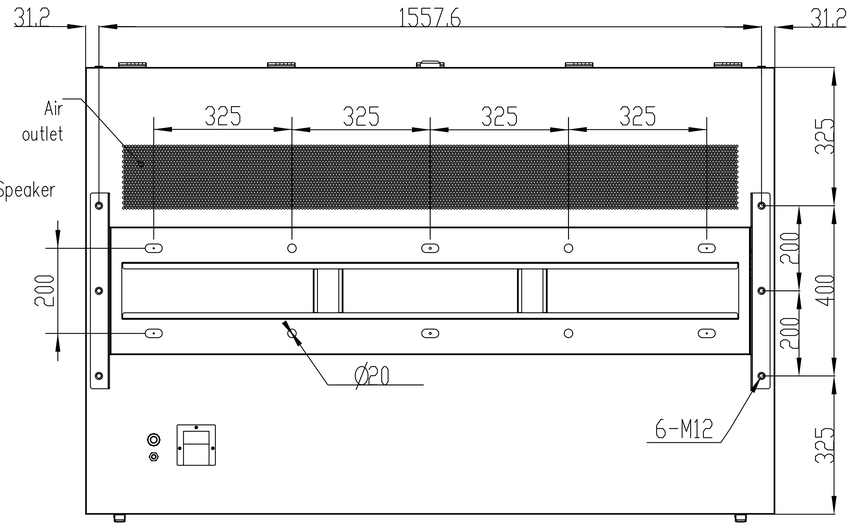

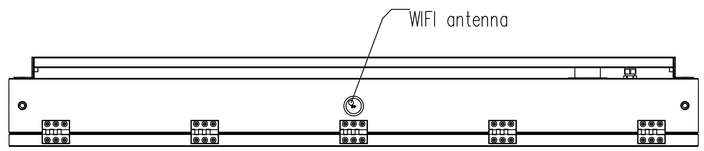

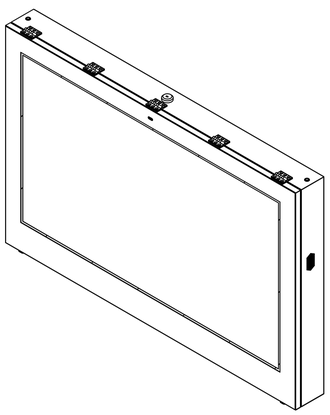

.X	±0.1		
.XX	±0.01		
.XXX	±0.001	ANG	±0.5

DRAW:		DATE:		UNIT'S:	MM
CHKD:	*	DATE:	*	FINISH:	
STAD:	*	DATE:	*	MASS(Kg):	0.000
APPD:	*	DATE:	*	SCALE:	0.042
PRODUCT:	*			SHEET:	1 OF 1

TITLE:

DWG NO.:

PART NO.: *

REV: A0

MAT'L:

RELEASE LEVEL: [ ]*[ ]

FILE NAME:

A3