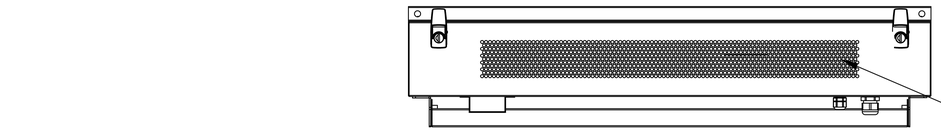
Air inlet

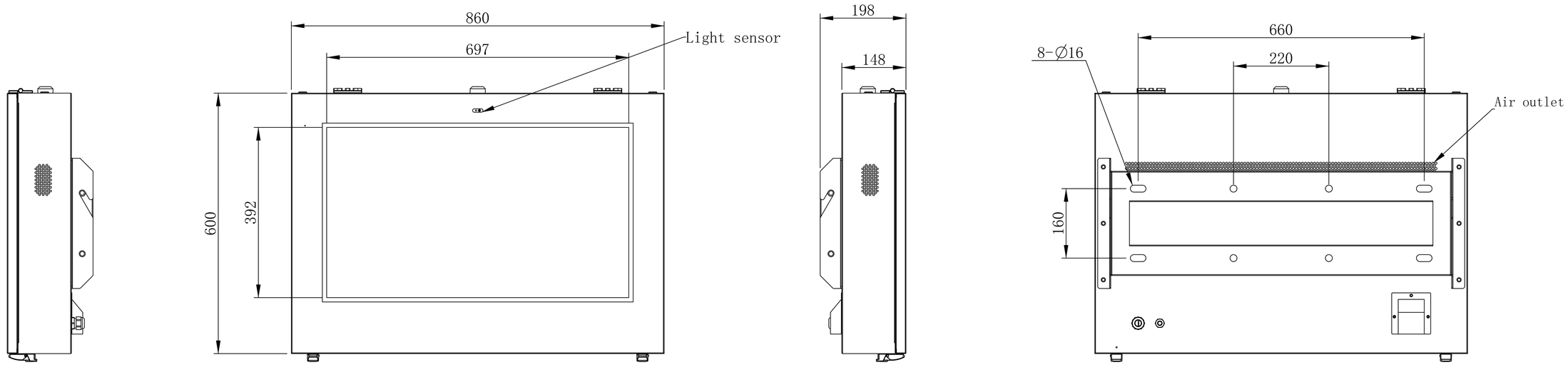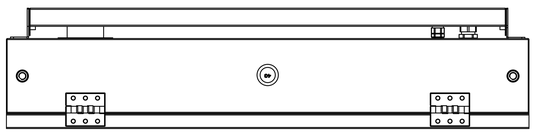
860
697
Light sensor
600
392
198
148
660
220
8-∅16
Air outlet
160