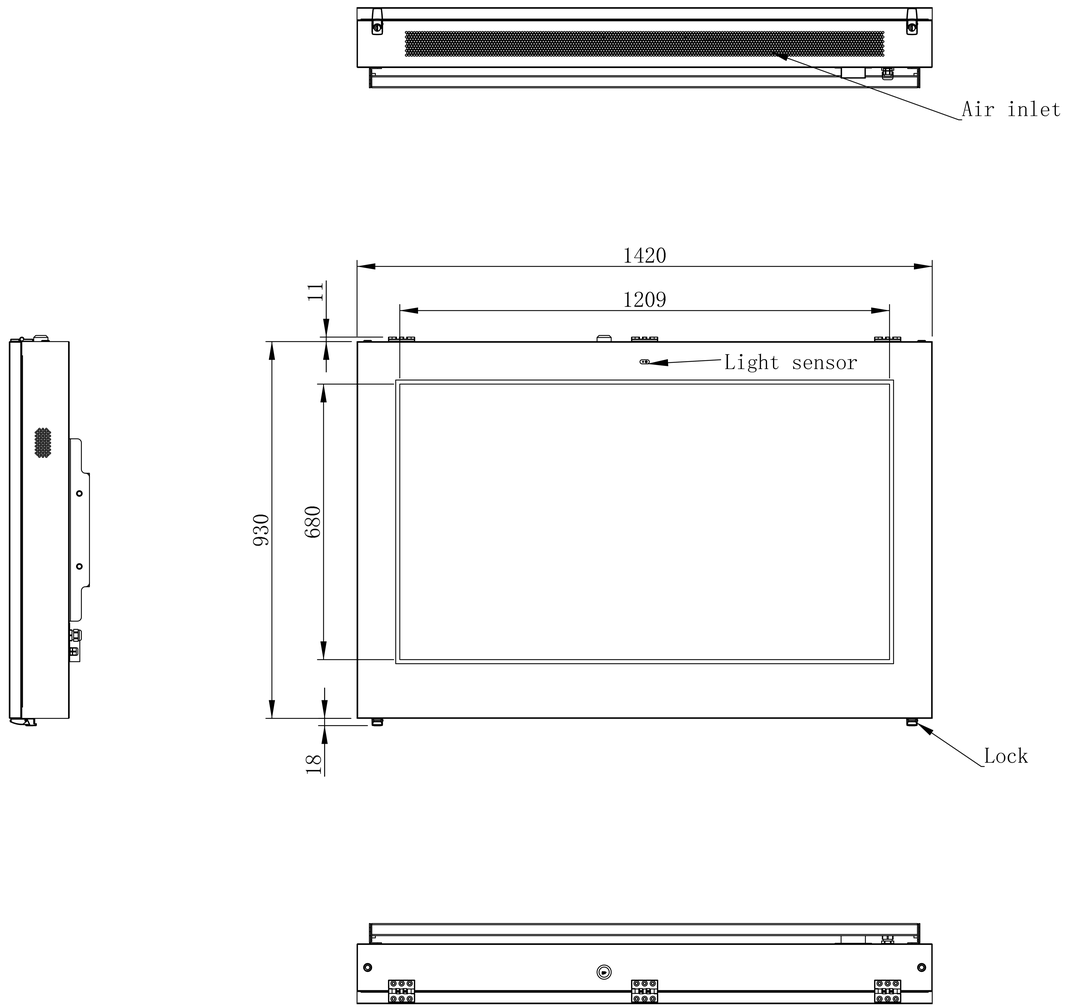
Air inlet
1420
1209
11
930
680
18
Light sensor
Lock

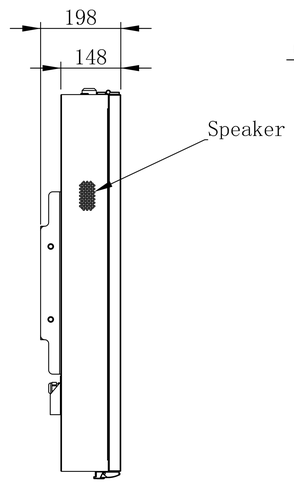
198
148
Speaker

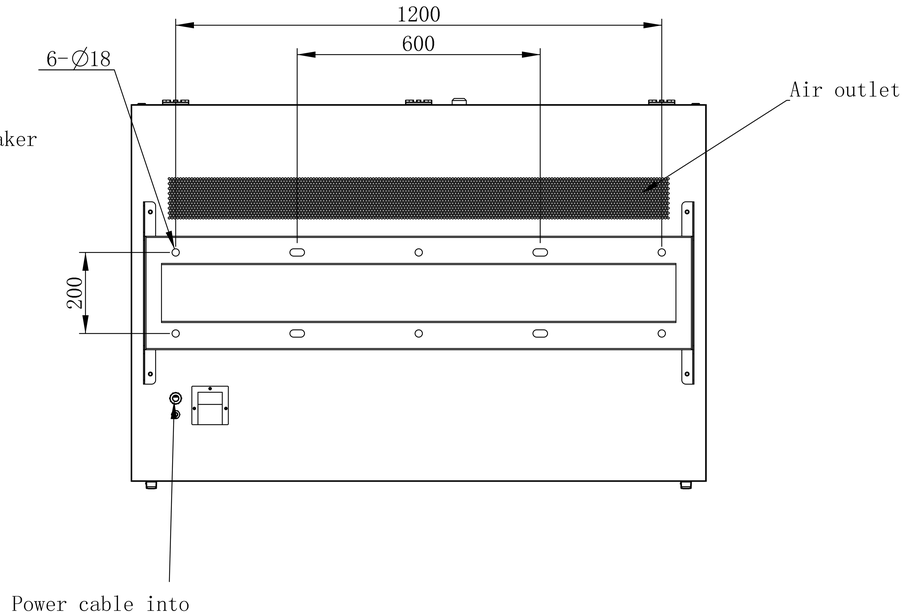
1200
600
6-∅18
Air outlet
200
Power cable into